INVENTRIA – PROJECT EXPO

PROJECT PLAN REPORT

1. TEAM DETAILS

TEAM NAME: WE ATE THE INSTRUCTIONS

TEAM MEMBERS:

MEMBER 1: MARIA ANTO J - EEE-II *(2403917710521028)*

MEMBER 2: NISHANTH D – EEE-II *(2403917710521035)*

MEMBER 3: DAANISH HASSAN S – EEE-II *(2403917710521008)*

MEMBER 4: RITHIKA T – EEE-II *(2403917710522109)*

---

2. ABSTRACT

Road traffic crashes claim approximately 1.19 million lives annually and injure 20–50 million more, often leaving survivors with long-term disabilities. They are the leading cause of death among individuals aged 5–29, with two-thirds of fatalities occurring in the working-age population.

Alarmingly, 92% of these deaths occur in low- and middle-income countries, which together account for only 60% of the global vehicle fleet. Vulnerable road users such as pedestrians, cyclists, and motorcyclists constitute over half of these fatalities, with powered two- and three-wheeler riders alone contributing 21%.

In India, traffic-related deaths rose from 123,000 in 2011 to nearly 169,000 in 2021, despite the nation having just 1% of the global vehicle population. More than half of these casualties involve vulnerable groups, underscoring the disproportionate risk they face.

These alarming statistics highlight the urgent need for effective and affordable crash-alert systems. This study focuses on developing an accident protection system using GSM and GPS modules to enable rapid communication and emergency response, particularly in regions lacking advanced vehicular safety infrastructure.

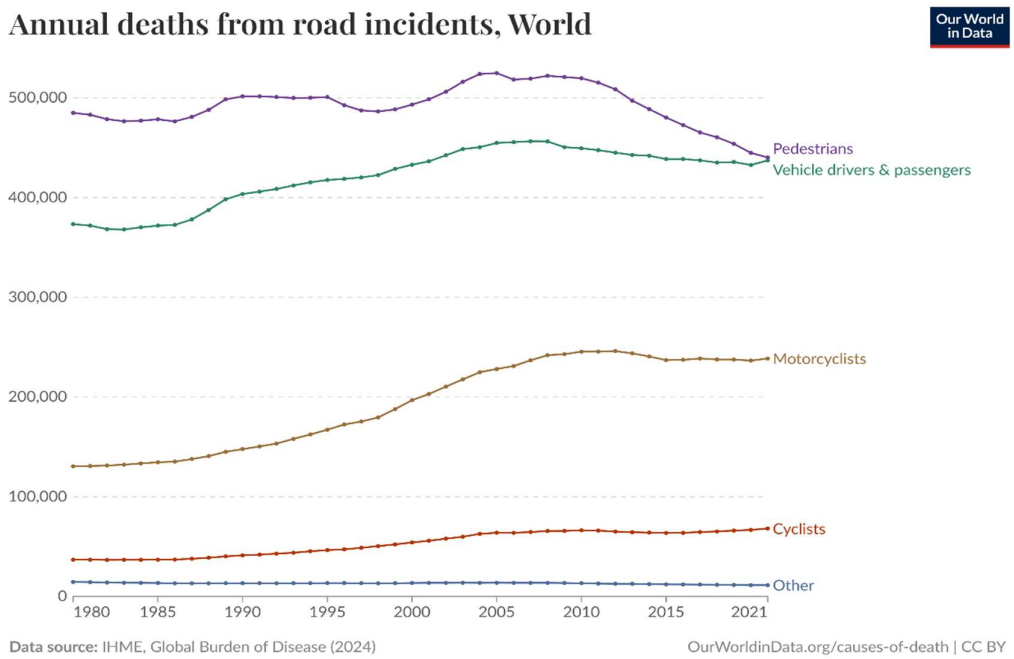

Fig 2.1 : Death from Road Accidents Annually

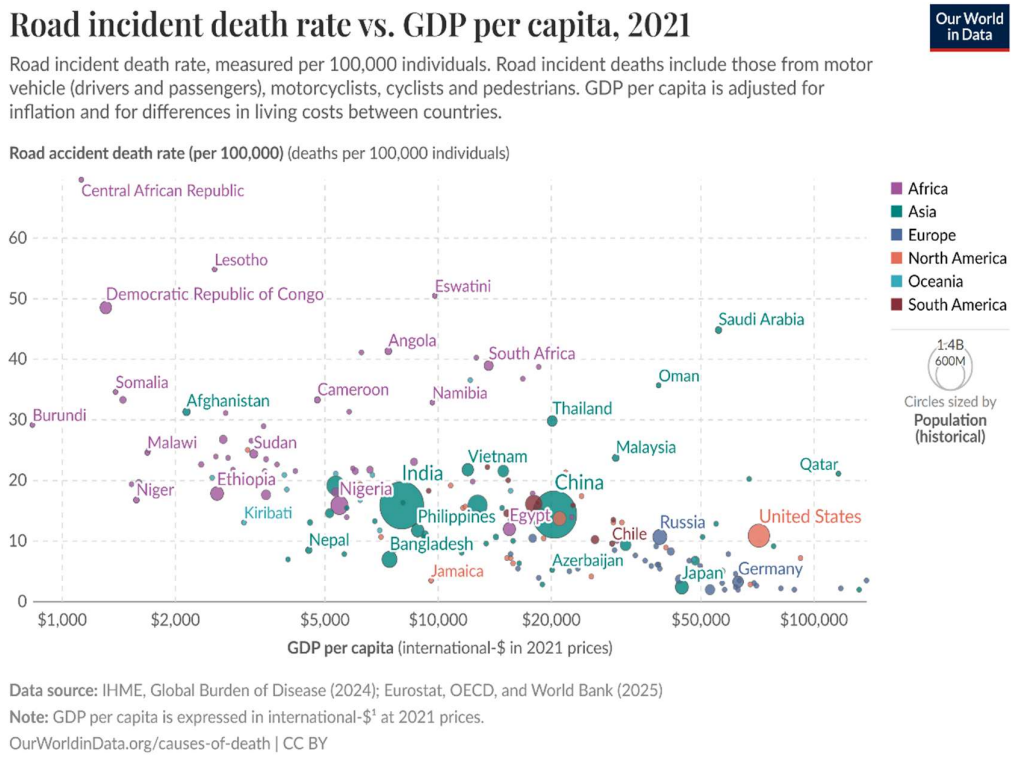

Fig 2.2 : Road incident death rate Vs. GDP per capita

3. PROBLEM STATEMENT

TITLE : "THE SAFETY GAP IN EMERGENCY RESPONSE FOR ROAD ACCIDENTS IN INDIA"

3.1. DESCRIPTION

A critical factor behind accident-related fatalities is the delay in providing medical assistance during the "golden hour." In many cases, victims survive the crash but succumb to injuries because emergency services are not alerted quickly enough. Although advanced crash-detection and automated alert systems like eCall in Europe or OnStar in North America exist, they are limited to newer, high-end vehicles and remain out of reach for the majority of the world's drivers. The reality is that most vehicles—particularly in developing nations and among two-wheeler riders—do not possess such features, leaving millions vulnerable to preventable loss of life. This gap highlights the urgent need for a solution that is affordable, retrofittable, and adaptable to diverse conditions.

---

4. SDG ALIGNMENT (SUSTAINABLE DEVELOPMENT GOAL)

4.1. SDG 3 – GOOD HEALTH AND WELL-BEING

- ***TARGET 3.6:*** Halve the number of global deaths and injuries from road traffic accidents by 2030.
- **JUSTIFICATION:** Road crashes claim over 1.3 million lives annually, with delayed medical response being a key cause of death. Our system directly tackles this by detecting accidents instantly and alerting emergency contacts with GPS location, dramatically cutting response time. This isn't just a gadget—it's a *life-saving intervention* in line with global health priorities.

4.2. SDG 9 – INDUSTRY, INNOVATION AND INFRASTRUCTURE

- ***TARGET 9.5:*** Enhance scientific research, upgrade technological capabilities, and foster innovation.
- **JUSTIFICATION:** Most vehicles globally—especially two-wheelers in developing regions—lack built-in crash-alert systems. By creating a low-cost, retrofittable IoT solution, our project democratizes access to safety tech that's usually locked behind premium cars. This embodies *frugal innovation*—building impactful infrastructure at scale without expensive imports.

4.3. SDG 11 – SUSTAINABLE CITIES AND COMMUNITIES

- ***TARGET 11.2:*** Provide access to safe, affordable, sustainable transport systems for all.
- **JUSTIFICATION:** Safer transport systems aren't just about smoother roads—they're about making sure help arrives when lives are at stake. Our project strengthens urban and rural mobility safety, ensuring that *no rider is left unseen in the dark*. It aligns with making communities more resilient, connected, and human-centric.

---

5. PROJECT OVERVIEW

PROJECT TITLE: A.L.E.R.T. - ACCIDENT LOCATION & EMERGENCY RESPONSE TECHNOLOGY

5.1. OBJECTIVE OF THE PROBLEM

The primary objective of this project is to minimize fatalities caused by delays in emergency response after road accidents. Despite the availability of advanced crash-detection systems in premium vehicles, the majority of road users—particularly in developing nations—lack access to such technology. This creates a critical gap in

accident protection, especially during the “golden hour,” when timely medical intervention can save lives.

Our objective is therefore to design an accident detection and alert system that is:

1. AFFORDABLE – ensuring cost-effectiveness so it can be adopted widely, especially in resource-constrained regions.
2. RETROFIT-FRIENDLY – adaptable to existing vehicles, including two-wheelers and older models.
3. RELIABLE – capable of accurately detecting collisions using accelerometer sensors.
4. RESPONSIVE – able to transmit accident alerts and GPS coordinates instantly via GSM to emergency contacts.
5. SCALABLE – suitable for diverse environments and extendable to broader intelligent transportation applications.

By meeting these objectives, the project directly addresses the limitations of current systems and provides a practical solution to reduce preventable accident-related deaths.

5.2. PROPOSED SOLUTION

“ IOT BASED AUTOMATIC ACCIDENT DETECTION AND EMERGENCY ALERT SYSTEM FOR VEHICLES”

Our project introduces a low-cost accident detection and emergency alert system designed to bridge this global safety gap. The system integrates motion sensors, GPS, and GSM communication modules to detect collisions and instantly transmit location details to pre-registered emergency contacts. Unlike proprietary systems tied to premium vehicles, our solution is simple, scalable, and cost-effective, making it suitable for both cars and two-wheelers in varied settings. By drastically reducing response times, it enhances the chances of survival and aligns directly with Sustainable Development Goals

6. TECHNOLOGY STACK

6.1. HARDWARE:

Microcontroller Unit (Arduino Uno / Nano, ATmega328P)	Serves as the central processing unit, executing sensor data acquisition, crash detection algorithms, and communication protocols.
GSM Module (SIM800L / SIM900A Quad-band GSM/GPRS)	Provides cellular connectivity for transmitting SMS alerts containing geolocation and timestamp data.
GPS Receiver Module (u-blox NEO-6M or equivalent)	Acquires precise geospatial coordinates (longitude, latitude) with real-time clock synchronization.
Inertial Measurement Unit (IMU – MPU6050 or equivalent, 3-axis accelerometer + 3-axis gyroscope)	Detects abnormal accelerations, angular velocity, and orientation shifts indicative of collision events
Rechargeable Lithium-Ion Battery Pack (7.4V, 2200–3000 mAh)	Powers the embedded system; designed for portability and resilience against vehicle power fluctuations.
Local Alert Interface (Piezoelectric Buzzer / High-luminance LED)	Provides immediate audible/visual indication of system activation or fault detection.
Protective Enclosure (ABS Polymer Housing, IP54 Rated)	Shields electronics from mechanical shock, dust, and moisture; ensures system durability in vehicular environments

6.2. SOFTWARE:

Arduino IDE	Writing, compiling, and uploading code to Arduino.
CIRKIT DESIGNER	To simulate circuit digitally.

7. IMPLEMENTATION DETAILS

7.1. SYSTEM ARCHITECTURE

The architecture of the proposed accident detection and emergency alert system is structured into five core subsystems:

- **SENSING LAYER,**
- **PROCESSING LAYER,**
- **VALIDATION LAYER,**
- **LOCALIZATION LAYER,**
- **COMMUNICATION LAYER.**

Together, these ensure reliable detection, filtering of false positives, and rapid dissemination of emergency alerts.

7.1.1. SENSING LAYER (IMU-BASED ACCIDENT DETECTION)

At the foundation of the system lies the Inertial Measurement Unit (IMU – MPU6050), which integrates a 3-axis accelerometer and 3-axis gyroscope.

- The accelerometer continuously samples linear acceleration vectors across X, Y, and Z axes. A sudden spike in magnitude (e.g., exceeding ±5g) is interpreted as a potential collision signature.
- The gyroscope records angular velocity; rapid orientation shifts (rollover or abrupt tilt beyond set thresholds) further strengthen the classification of an event as an accident.
- This sensor fusion approach ensures robustness, as real-world accidents typically involve both linear impact and orientation disruption.

The IMU continuously streams raw motion data to the microcontroller over the I^2C bus, ensuring low-latency, high-precision monitoring.

7.1.2. PROCESSING LAYER (MICROCONTROLLER UNIT)

The Arduino Uno/Nano (ATmega328P) acts as the computational hub.

- It executes an impact detection algorithm, which compares incoming sensor readings against pre-programmed thresholds.
- To reduce false triggers (e.g., potholes or sudden braking), the MCU employs temporal validation: acceleration spikes must persist for a defined duration (e.g., >100 ms) before being classified as a crash.
- Once confirmed, the MCU raises an interrupt flag and triggers the Validation Layer sequence.

This architecture ensures that accident recognition occurs locally on-device without reliance on cloud or external computation, guaranteeing functionality even in low-connectivity areas.

7.1.3. VALIDATION LAYER (USER INTERACTION AND FAIL - SAFE CONTROL)

To distinguish genuine accidents from false positives, the system integrates a two-stage user validation protocol:

1. Auditory Alert – A piezoelectric buzzer is activated immediately after detection, alerting the occupant.
2. Response Window – The user is granted a 10-second interval to press the manual override push button.
    - If pressed: The system cancels the alert, resets the IMU buffer, and resumes monitoring.
    - If not pressed: The system assumes incapacitation and automatically escalates to the communication phase.

This validation layer introduces a human-in-the-loop fail-safe, balancing automation with reliability.

7.1.4. LOCALIZATION LAYER (GPS INTEGRATION)

Once an accident is validated, the system queries the GPS receiver module (NEO-6M).

- The module outputs NMEA sentences containing geospatial coordinates, speed, and Universal Time Coordinated (UTC) data.
- The MCU parses these strings, extracts latitude/longitude, and embeds them into a structured emergency message.
- Timestamping ensures that responders receive accurate temporal context of the event.

By coupling IMU-based crash detection with GPS localization, the system transforms raw motion anomalies into actionable, location-specific emergency data.

7.1.5. COMMUNICATION LAYER (GSM ALERT TRANSMISSION)

The final layer of the architecture handles outward communication through the GSM module (SIM800L/SIM900A).

- Stage 1 – Voice Call Notification: The MCU instructs the GSM module to dial the preconfigured emergency contact. This immediate call maximizes the chance of drawing attention, even if the recipient misses the SMS.
- Stage 2 – SMS Transmission: A structured text message is sent containing:
    - Accident alert identifier
    - GPS coordinates (latitude/longitude)
    - Timestamp
    - Optional pre-stored rider/vehicle ID

This dual-channel alert strategy enhances reliability, ensuring that emergency responders or family contacts are notified even if one channel fails.

7.2. FLOW CHART

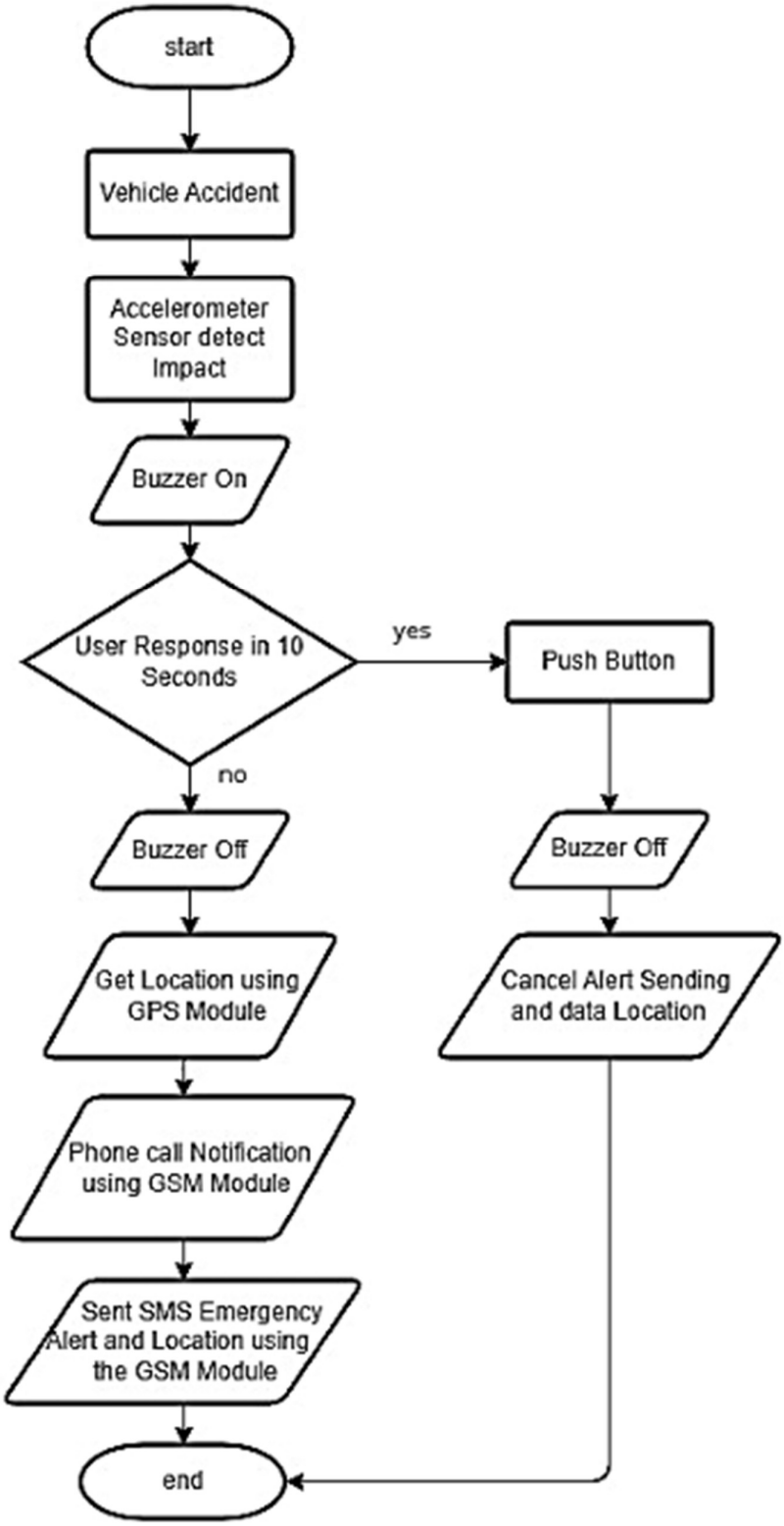

Fig 7.1: FLOW CHART

7.3. BLOCK DIAGRAM AND CIRCUIT DIAGRAM

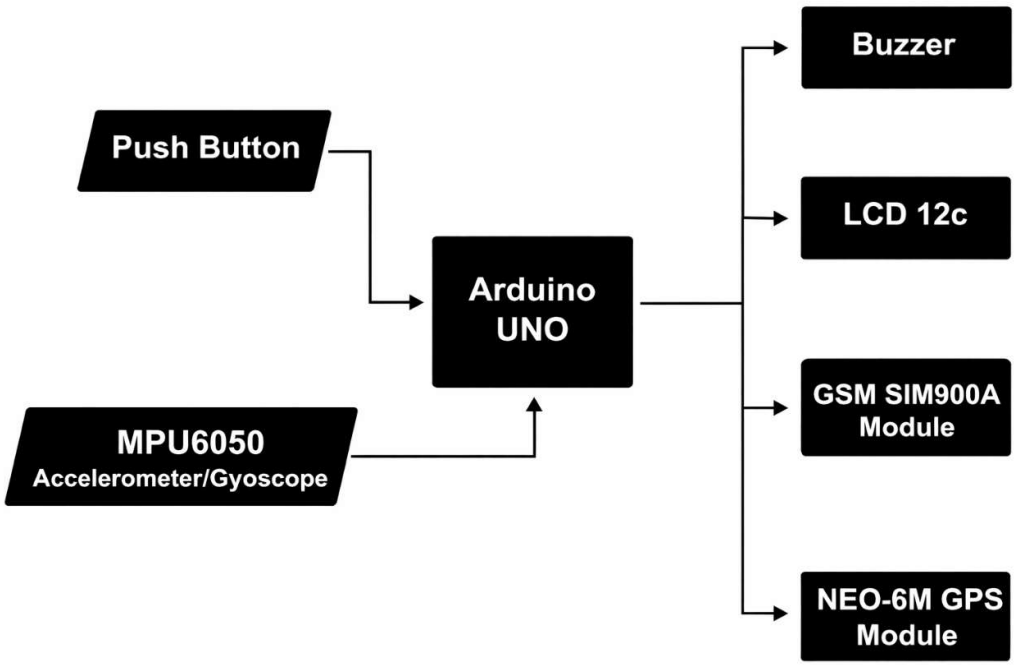

Fig 7.2: BLOCK DIAGRAM

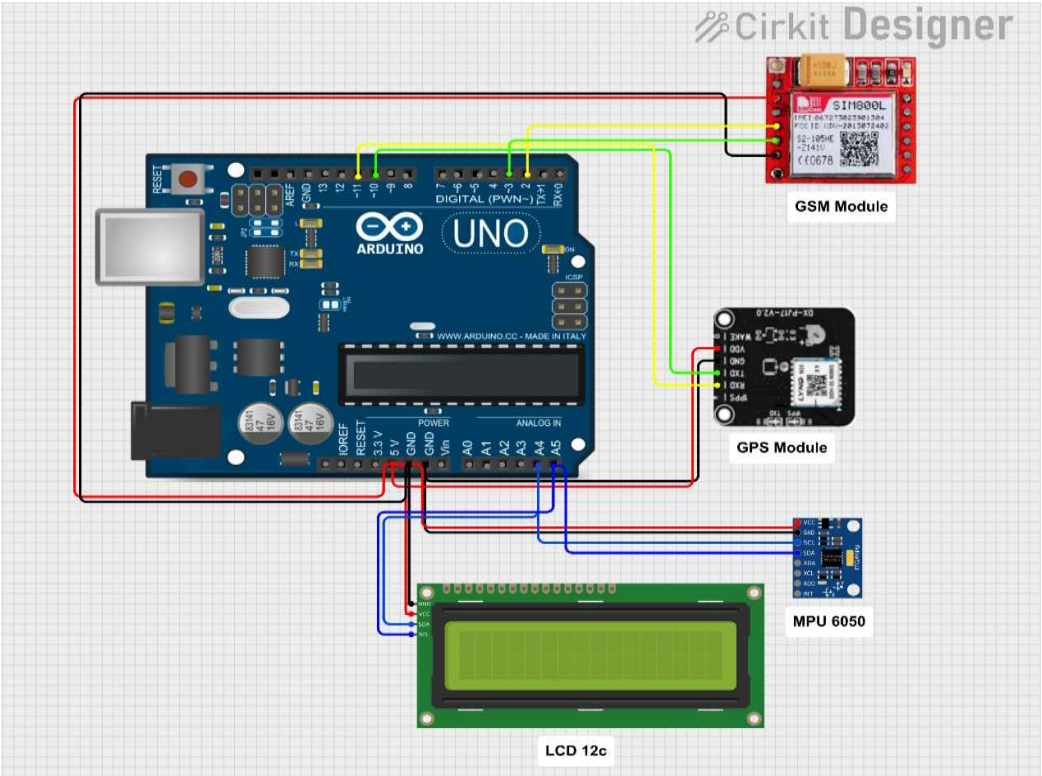

Fig 7.3: Schematic Circuit using CIRKIT DESIGNER Tool

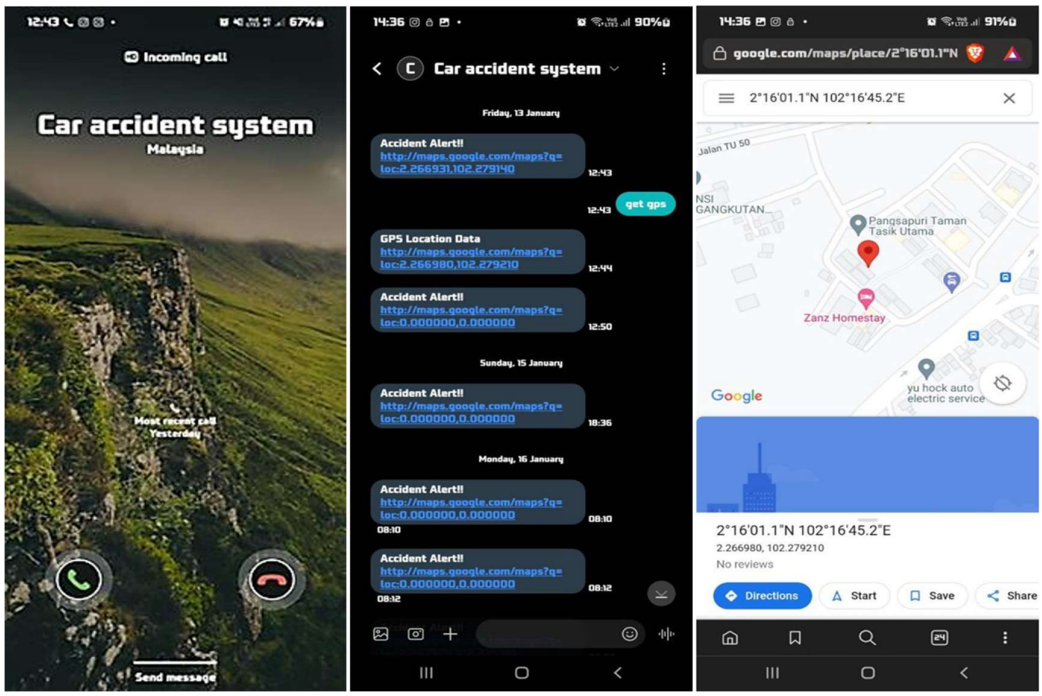

Fig 7.4: Emergency call and location information (a) Emergency call using gsm module, (b) Alert message and location information and (c) Location obtained by GPS module.

7.4. ARDUINO CODE

```
#include <Wire.h>

#include <SoftwareSerial.h>

#include <TinyGPS++.h>

#include <U8g2lib.h>


// ================= OLED =================

U8G2_SH1106_128X64_NONAME_1_HW_I2C u8g2(U8G2_R0,
U8X8_PIN_NONE);


// ================= MODULE PINS =================

const int MPU_addr = 0x68;
```

```
SoftwareSerial BT(2, 3);
SoftwareSerial gpsSerial(8, 9);
const int buttonPin = 4;
const int ledPin = 13;
const int buzzerPin = 12;

// ================== MPU ==================
float pitch = 0.0;
float gyroBiasX = 0.0;
int calibrationSamples = 500;
unsigned long lastTime = 0;

// ================== RIDER INFO ==================
String riderName = "Nishh";
String vehicleNo = "TN-59-AB-1234";

// ================== THRESHOLDS ==================
const float PITCH_THRESHOLD_MIN = 30.0;
const float PITCH_THRESHOLD_MAX = 310.0;

// ================== ALERT CONTROL ==================
bool alertTriggered = false;
bool waitingForCancel = false;
unsigned long alertStartTime = 0;
unsigned long lastBlinkTime = 0;
```

```
bool ledState = false;


// ================== OLED DISPLAY FUNCTION ==================

void showDisplay(String line1, String line2, String line3,
String line4) {

  u8g2.firstPage();

do {

  u8g2.setFont(u8g2_font_6x12_tr);


  u8g2.drawStr(0, 12, line1.c_str());

  u8g2.drawStr(0, 26, line2.c_str());

  u8g2.drawStr(0, 40, line3.c_str());

  u8g2.drawStr(0, 54, line4.c_str());


} while (u8g2.nextPage());

}


// ================== SETUP ==================

void setup() {

  Wire.begin();

  BT.begin(38400);

  gpsSerial.begin(9600);

  Serial.begin(9600);


  u8g2.begin();
```

```
pinMode(buttonPin, INPUT_PULLUP);
pinMode(ledPin, OUTPUT);
pinMode(buzzerPin, OUTPUT);

showDisplay("System Booting...", "", "", "");

// MPU INIT
Wire.beginTransmission(MPU_addr);
Wire.write(0x6B);
Wire.write(0);
Wire.endTransmission(true);

showDisplay("Calibrating MPU", "", "", "");
calibrateGyro();

// ===== GPS INIT =====
showDisplay("Initializing GPS", "", "", "");

int randomDelay = random(1000, 10000);
unsigned long start = millis();

while (millis() - start < randomDelay) {
  showDisplay("GPS Status:", "No Fix...", "", "");
  delay(1000);
```

```
  }

  showDisplay("GPS Ready", "Calibrated", "", "");

  lastTime = millis();
  delay(1500);

  showDisplay("System Ready", riderName, vehicleNo, "");
}

// ================== LOOP ==================
void loop() {

  // RESET
  if (digitalRead(buttonPin) == LOW) {
    resetSystem();
    return;
  }

  // ALERT MODE
  if (alertTriggered) {

    if (waitingForCancel) {

      // LED BLINK
```

```
      if (millis() - lastBlinkTime >= 200) {
        ledState = !ledState;
        digitalWrite(ledPin, ledState);
        lastBlinkTime = millis();
      }

      playAlertTone();

      showDisplay("ACCIDENT!", "Waiting Cancel", "Press Btn /
BT OK", "");

      // BUTTON CANCEL
      if (digitalRead(buttonPin) == LOW) {
        showDisplay("Cancelled", "By User", "", "");
        resetSystem();
        return;
      }

      // BT CANCEL
      String input = "";

if (BT.available()) {
  char c = BT.read();
input +=c;
```

```
}

// check after reading
//input.trim();
input.toLowerCase();

if (input == "ok") {
  Serial.println(" ALERT CANCELLED VIA BT");
  resetSystem();
  return;
}

      // AFTER 5 SEC
      if (millis() - alertStartTime >= 10000) {

        String message = "ACCIDENT ALERT \n";
        message += "Rider: " + riderName + "\n";
        message += "Vehicle: " + vehicleNo + "\n\n";
        message += "Location:\nLat:9.885340\nLng:78.080399";

        BT.println(message);

        showDisplay("ALERT SENT!", riderName, locationData,
locationData2);
```

```
      waitingForCancel = false;
    }
  }

  return;
}

// ===== GYRO =====
Wire.beginTransmission(MPU_addr);
Wire.write(0x43);
Wire.endTransmission(false);
Wire.requestFrom(MPU_addr, 2, true);
int16_t rawGyX = Wire.read() << 8 | Wire.read();

unsigned long currentTime = millis();
float dt = (currentTime - lastTime) / 1000.0;
lastTime = currentTime;

float gyroX_deg = ((float)rawGyX - gyroBiasX) / 131.0;
pitch += gyroX_deg * dt;

if (pitch < 0) pitch += 360;
if (pitch >= 360) pitch -= 360;

// NORMAL DISPLAY
```

```
  showDisplay("Monitoring...", riderName, vehicleNo, "System
Active");



  // ACCIDENT DETECT

  if (pitch >= PITCH_THRESHOLD_MIN && pitch <=
PITCH_THRESHOLD_MAX) {



    Serial.println("ACCIDENT DETECTED ");



    alertTriggered = true;

    waitingForCancel = true;

    alertStartTime = millis();



    showDisplay("ACCIDENT DETECTED!", "Locking Location...",
"", "");

  }



  delay(200);

}



// ================== RESET ==================

void resetSystem() {

  pitch = 0;

  alertTriggered = false;

  waitingForCancel = false;
```

```
  digitalWrite(ledPin, LOW);
  noTone(buzzerPin);
  ledState = false;

  showDisplay("System Reset", "Ready Again", "", "");

  delay(1000);
}

// ================== CALIBRATION ==================
void calibrateGyro() {
  long sum = 0;

  for (int i = 0; i < calibrationSamples; i++) {
    Wire.beginTransmission(MPU_addr);
    Wire.write(0x43);
    Wire.endTransmission(false);
    Wire.requestFrom(MPU_addr, 2, true);

    int16_t rawGyX = Wire.read() << 8 | Wire.read();
    sum += rawGyX;
    delay(2);
  }

  gyroBiasX = (float)sum / calibrationSamples;
```

```
}


// ================== BUZZER ==================
void playAlertTone() {
  tone(buzzerPin, 1000);
  delay(150);
  tone(buzzerPin, 700);
  delay(150);
}
```

---

8. IMPACT & INNOVATION

8.1.INDUSTRIAL IMPACT:

Automotive Innovation: Encourages vehicle manufacturers and aftermarket providers to integrate IoT-based safety systems into their products.

Insurance Benefits: Facilitates quick claim processing and fraud prevention through real-time accident data.

Emergency Service Optimization: Helps ambulance, police, and rescue services allocate resources more effectively.

Growth of IoT and Telematics Industry: Opens new market opportunities for sensor manufacturers, IoT developers, and connectivity providers.

8.2.INNOVATION:

Title Reff	Location detection	Alert messages	Family member	Police station	Hospital
[12]	✓		✓	✓	✓
[18]	✓			✓	✓
[16]		✓			
[08]	✓		✓		
[11]	✓		✓		✓
[21]	✓	✓	✓		✓
[02]	✓	✓			✓
[20]	✓	✓			✓
Our System	✓	✓	✓	✓	✓

This system stands out for its affordability, accuracy, and adaptability:

1. Low-Cost Retrofitability – Can be added to any vehicle, especially two-wheelers, unlike premium in-built telematics.
2. Sensor Fusion (IMU) – Uses accelerometer + gyroscope for reliable crash detection and fewer false alarms.
3. Fail-Safe Validation – Buzzer and push-button allow the user to cancel false triggers.
4. Dual-Channel Alerts – Sends both SMS and phone calls for redundancy.
5. Scalable Design – Runs on independent battery packs, adaptable to cars, bikes, or rural transport.

---

9. FUTURE SCOPE & SCALABILITY

The proposed system establishes a strong foundation for low-cost accident detection and emergency response. However, its potential extends far beyond the current prototype.

1. IOT AND CLOUD INTEGRATION

- Future iterations can transmit accident data to cloud servers, enabling centralized **real-time monitoring by emergency services** or smart traffic control centres.
- Integration with **healthcare networks** could allow hospitals to receive patient location and accident severity instantly.

2. BLACK-BOX EVENT RECORDING

- By adding onboard storage (SD card or flash memory), the system could serve as a **vehicle black-box**, recording sensor data before and after impact for post-accident investigation and insurance purposes.

3. AI-ENHANCED DETECTION

- Machine learning algorithms could be trained on IMU data to differentiate between accident types (head-on collision, rollover, skidding) and predict injury severity.
- Adaptive thresholds can be implemented based on driving patterns, terrain, and vehicle type.

4. VEHICLE-TO-VEHICLE (V2V) AND VEHICLE-TO-INFRASTRUCTURE (V2I) COMMUNICATION

- The system can be expanded into a **cooperative safety network**, where nearby vehicles or roadside units are immediately notified of accidents to prevent secondary collisions.

5. WEARABLE INTEGRATION

- Miniaturized versions of the system could be embedded in **helmets or smart jackets**, directly protecting motorcyclists, cyclists, and e-scooter riders.

10.SENIOR MENTOR DETAILS

NAME : MADHANKUMAR S
DEPARTMENT : EEE – III
CONTACT : +91 8056395713

---

11. REFERENCES

[1]. Bhatia, G., & Kumar, V. (2010). Adapting MAC 802.11 for performance optimization of MANET Using Cross Layer Interaction. International Journal of Wireless & Mobile Networks (IJWMN) Vol, 2, 31-42.

[2]. Sharma, S. and Sebastian, S., 2019. IoT based car accident detection and notification algorithm for general road accidents. International Journal of Electrical and Computer Engineering (IJECE), [online] Vol.9(No.5), p.7.

[3]. H. Singh, K. Tiwari, P. Pandey, and R. Maheshwari, "IOT Based Automatic Vehicle Accident Detection and Rescue System," International Research Journal of Engineering and Technology (IRJET), vol. 7, no. 4, p. 5, 2020

[4]. Hatim, S., Elias, S., Awang, N. and Yusof Darus, M., 2018. VANETs and Internet of Things (IoT): A Discussion. Indonesian Journal of Electrical Engineering and Computer Science, Vol.12(No.1), p.8.

[5]. Nagvekar, A., Betkar, S., Kute, V. and Patil, A., 2021. SIMULATION OF ACCIDENT DETECTION SYSTEM USING VANET. www.ijrar.org (E-ISSN 2348-1269, P- ISSN 2349-5138), 7(1), p.4.

[6]. K. Ashokkumar, C. Venkata Deepak and D. Chowdary, "Sign Board Monitoring and Vehicle Accident Detection System Using IoT," International Conference on Frontiers in Materials and Smart System Technologies, 2021.

[7]. SANY, S. and RIYADH, M., 2017. IoT Based Vehicle Accident Detection & Rescue Information System

[8]. S., Srimanikandan, S., Sriram, G. and Jenifer, A., 2020. Automatic Accident Detection and Reporting System. IJESC.

[9]. Shugran, Mahmoud Ali Al, Applicability of Overlay Non-Delay Tolerant Position-Based Protocols in Highways and Urban Environments for Vanet (2021). International Journal of Wireless & Mobile Networks (IJWMN)

[10]. Abdulwahhab, Mohanad M., Mohd Fadlee A. Rasid, and Fazirulhisyam Hashim. "Bio-inspired seamless vertical handover algorithm for vehicular ad hoc networks." International Journal of Wireless & Mobile Networks (IJWMN).

[11]. Shaik, A., Bowen, N., Bole, J., Kunzi, G., Bruce, D., Abdelgawad, A. and Yelamarthi, K., 2019. Smart Car: An IoT Based Accident Detection System. 2018 IEEE Global Conference on Internet of Things (GCIoT).

[12]. P. Prakash, P. Kalyan V, M. Kumar D A, J. Reddy, and P. G S, "VEHICLE COLLISION DETECTION USING IOT," International Research Journal of Modernization in Engineering Technology and Science, vol. 2, no. 5, p. 9, 2021. Available: http://www.irjmets.com. International Journal of Wireless & Mobile Networks (IJWMN), Vol.14, No.2, April 2022

[13]. Elsagheer Mohamed, S., 2013. Smart Street Lighting Control and Monitoring System for Electrical Power Saving by Using VANET. Int. J. Communications, NetworkandSystemSciences.

[14]. S. Vargheese, J. Varghese and S. T.G, "NIGHT TIME ACCIDENT DETECTION AND TRAFFIC SURVEILLANCE SYSTEM," JAC: A JOURNAL OF COMPOSITION THEORY, vol. 13.

[15]. S.R, A., Rai, A., M.A, P. and S.C, S., 2015. An IoT Based Accident Prevention & Tracking System for Night Drivers. International Journal of Innovative Research in Computer and Communication Engineering.

[16]. Ahmad, Abdel-Mehsen, New Access Technique in Vehicular Ad-Hoc Networks (June 2, 2017). International Journal of Wireless & Mobile Networks (IJWMN) Vol.9, No.3, June 2017, Available at SSRN: https://ssrn.com/abstract=3616816

[17]. Ardakani, Saeid Pourroostaei, ACR: A Cluster-Based Routing Protocol for VANET (April 2018). International Journal of Wireless & Mobile Networks (IJWMN)

[18]. Nachabe, Lina, Marc Girod-Genet, and Bachar ElHassan. "Semantic techniques for IoT data and service management: ONTOSMART system." International Journal of Wireless & Mobile Networks (IJWMN) Vol 8 (2016).

[19] Abdulwahhab, Mohanad M., Mohd Fadlee A. Rasid, and Fazirulhisyam Hashim. "Bio-inspired seamless vertical handover algorithm for vehicular ad hoc networks." International Journal of Wireless & Mobile Networks (IJWMN)

[20] Elkhodr, Mahmoud. "Seyed Shahrestani and Hon Cheung,"Emerging wireless technologies in the internet of things: a comparative study"." International Journal of Wireless & Mobile Networks (IJWMN) Vol 8. [21] Nanda, S., Joshi, H., & Khairnar, S. (2018). An IoT Based Smart System for Accident Prevention and Detection. 2018 Fourth International Conference on Computing Communication Control and Automation (ICCUBEA). doi:10.1109/iccubea.2018.

21. Road Traffic Injuries - https://www.who.int/news-room/fact-sheets/detail/road-traffic-injuries

22. Report on Road Traffic Safety 2023 - https://www.fundacionaleatica.org/en/press-releases/report-road-safety-2023

23. Despite notable progress, road safety remains urgent global issue - https://www.who.int/news/item/13-12-2023-despite-notable-progress-road-safety-remains-urgent-global-issue